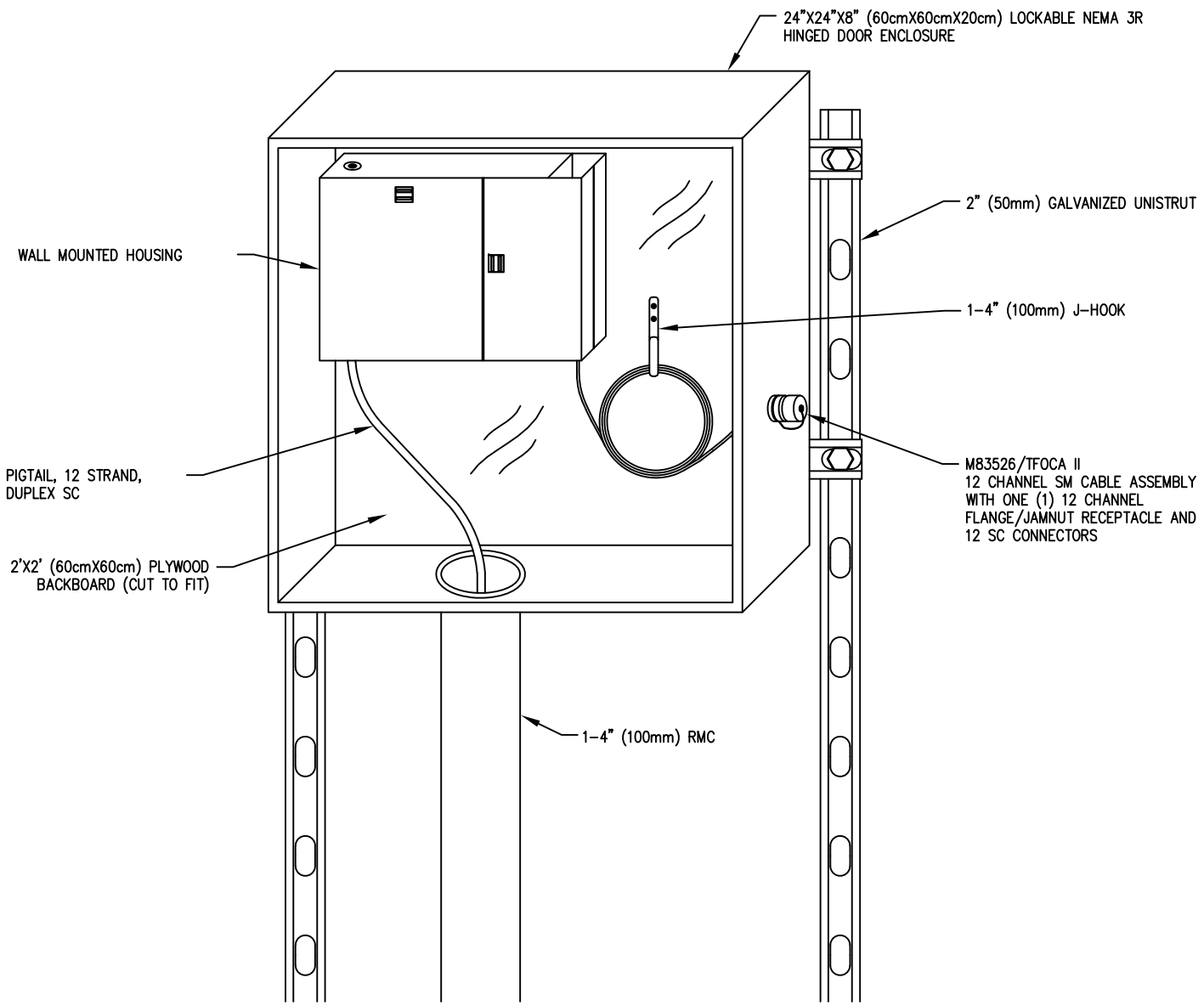


OPTION A
24"X24"X8" (60cmX60cmx20cm) LOCKABLE
NEMA 3R UHINGED DOOR ENCLOSURE DETAIL

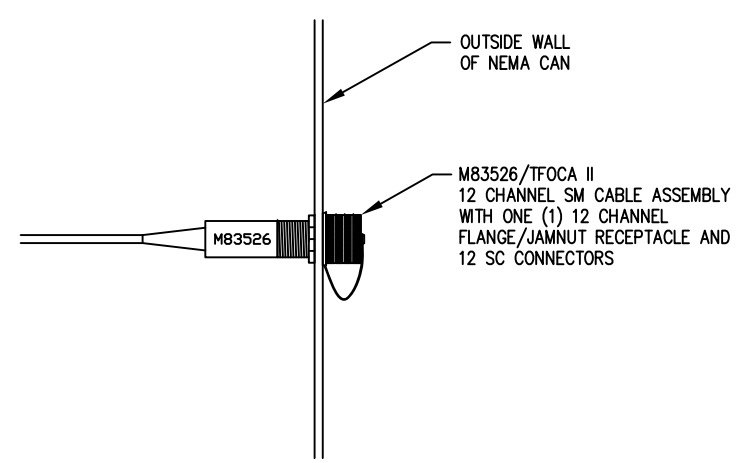


TFOCA II MOUNTING DETAIL