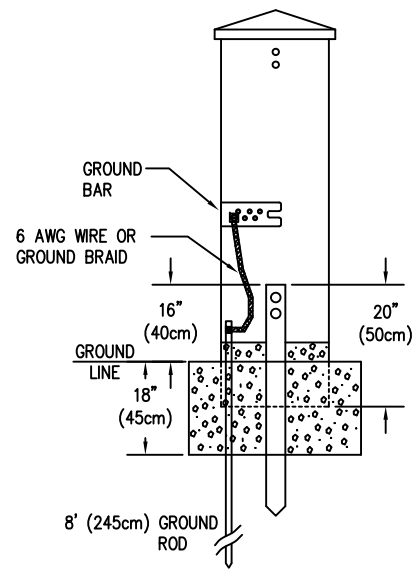


TYPICAL PEDESTAL
DETAIL B

| IMPERIAL DIMENSIONS | | | MAX * | MAX |
|---|---|---|---|---|
| HEIGHT | WIDTH | DEPTH | SPLICE | TERM |
| 49 1/2" | 4 7/8" | 4 7/8" | 150 PR | 12 PR |
| 50" | 6 5/8" | 6 5/8" | 400 PR | 25 PR |
| 50 5/16" | 8 1/4" | 8 1/4" | 900 PR | 25 PR |
| 50 5/16" | 12 7/8" | 12 7/8" | 3000 PR | 50 PR |
| 50 5/16" | 12 7/8" | 12 7/8" | 3000 PR | 50 PR |
| 50 5/16" | 12 7/8" | 12 7/8" | 3000 PR | 50 PR |
| METRIC DIMENSIONS | | | | |
| 1.26M | 114mm | 114mm | 150 PR | 10 PR |
| 1.27M | 165mm | 165mm | 400 PR | 30 PR |
| 1.28M | 210mm | 210mm | 800 PR | 30 PR |
| 1.28M | 330mm | 330mm | 3000 PR | 50 PR |
| 1.28M | 330mm | 330mm | 3000 PR | 50 PR |
| 1.28M | 330mm | 330mm | 3000 PR | 50 PR |

*TOTAL NUMBERS OF PAIRS SPLICED ARE DEPENDENT ON CONNECTOR USE AND LOCAL PRACTICES.

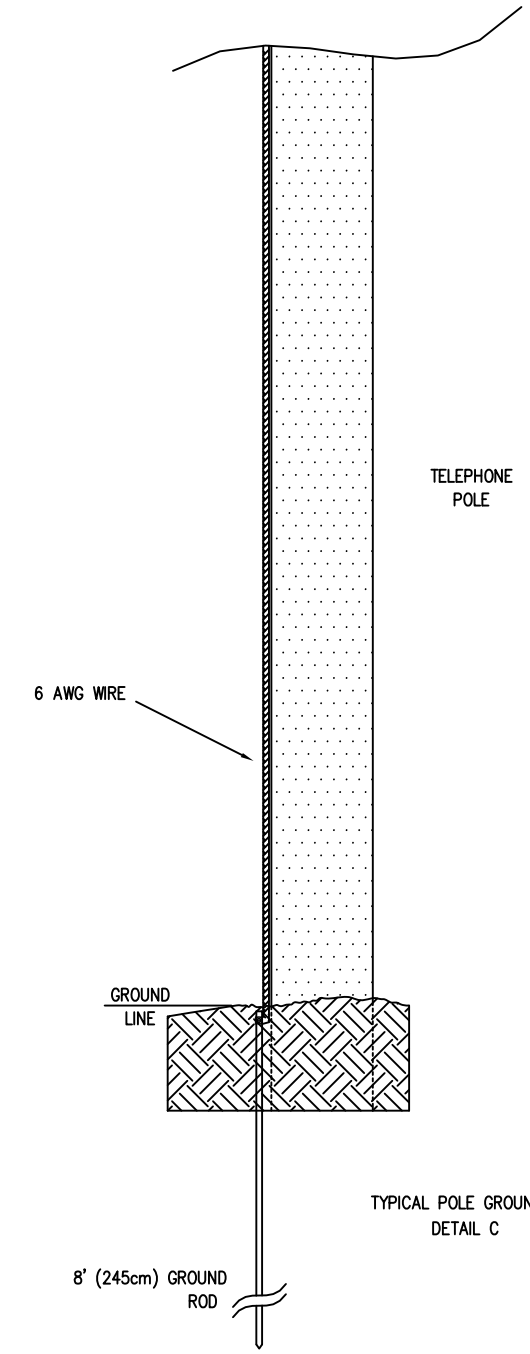


TYPICAL POLE GROUNDING
DETAIL C

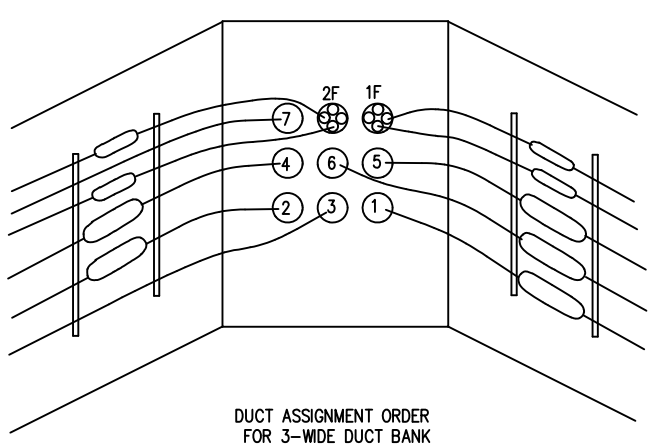


DUCT ASSIGNMENT ORDER
FOR 3-WIDE DUCT BANK
(FACING DCO)

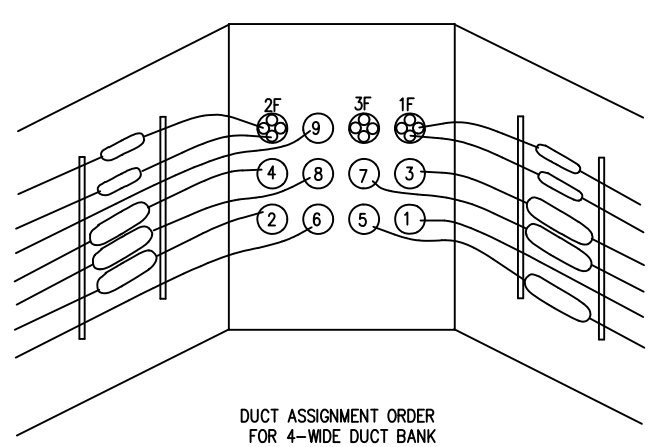


DUCT ASSIGNMENT ORDER
FOR 4-WIDE DUCT BANK
(FACING DCO)