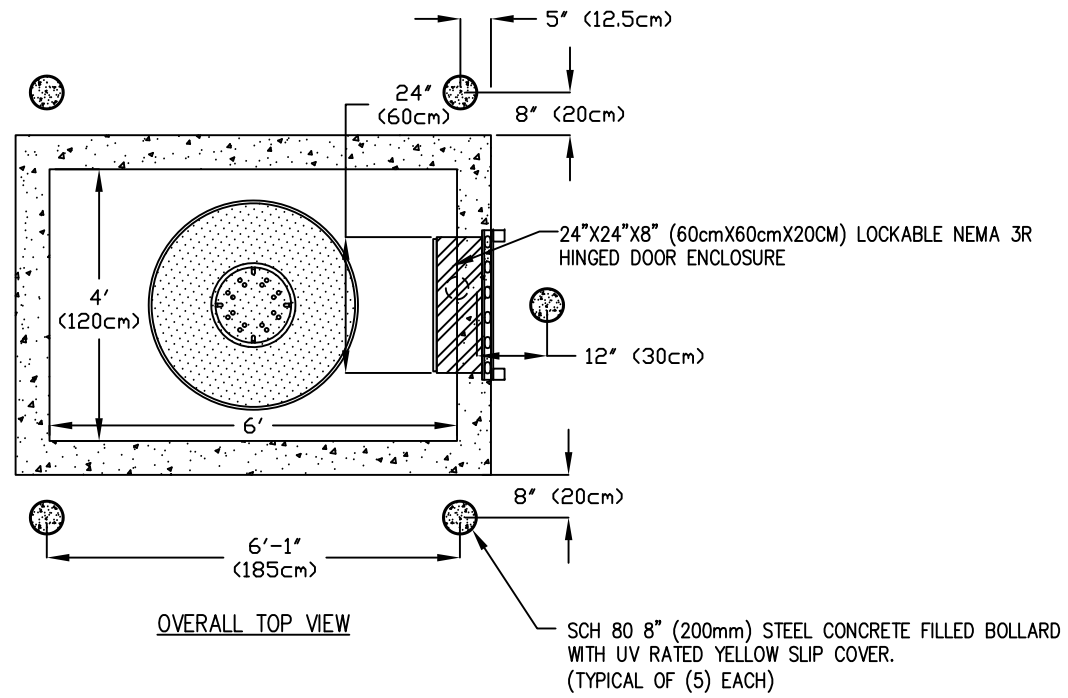


OVERALL TOP VIEW

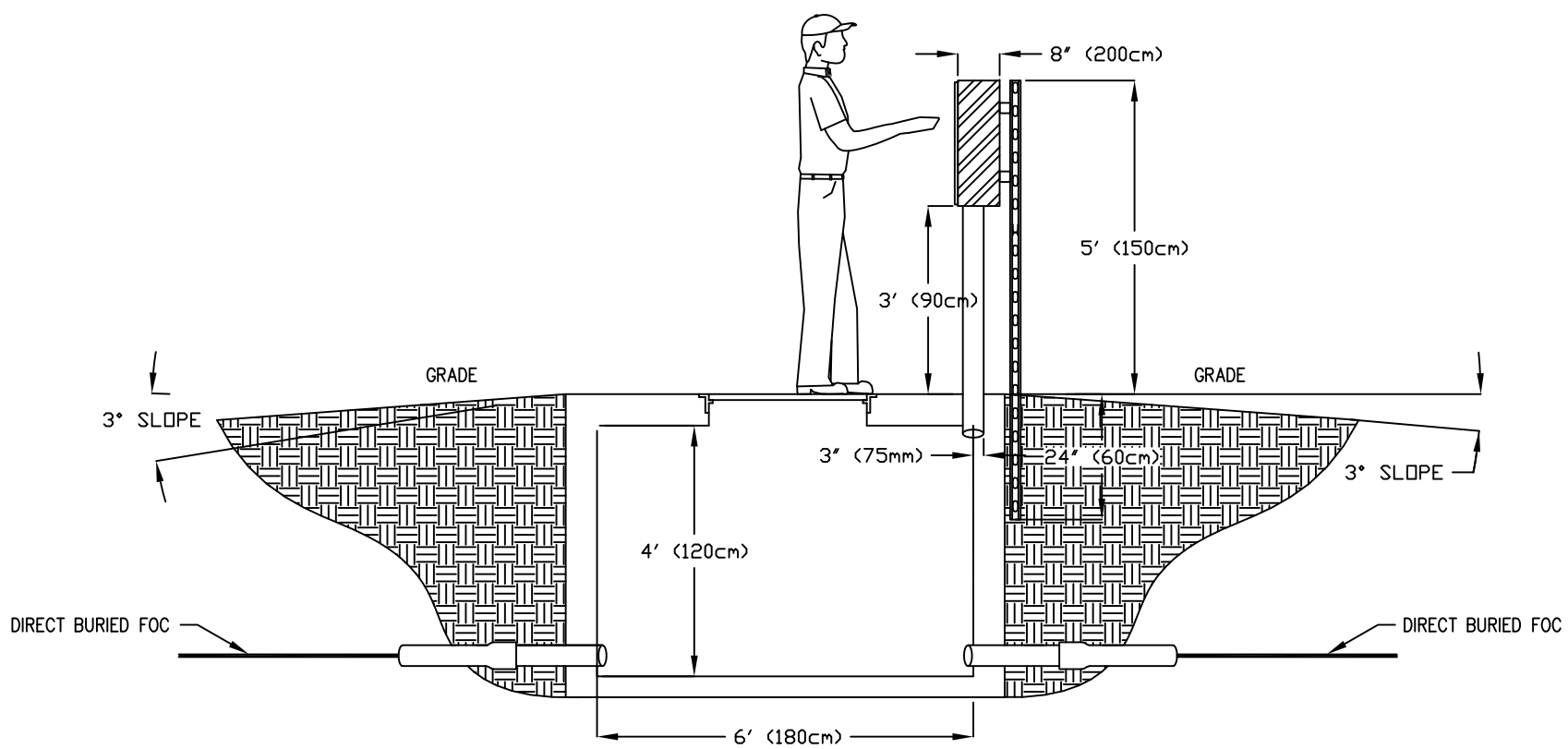


OVERALL SIDE VIEW