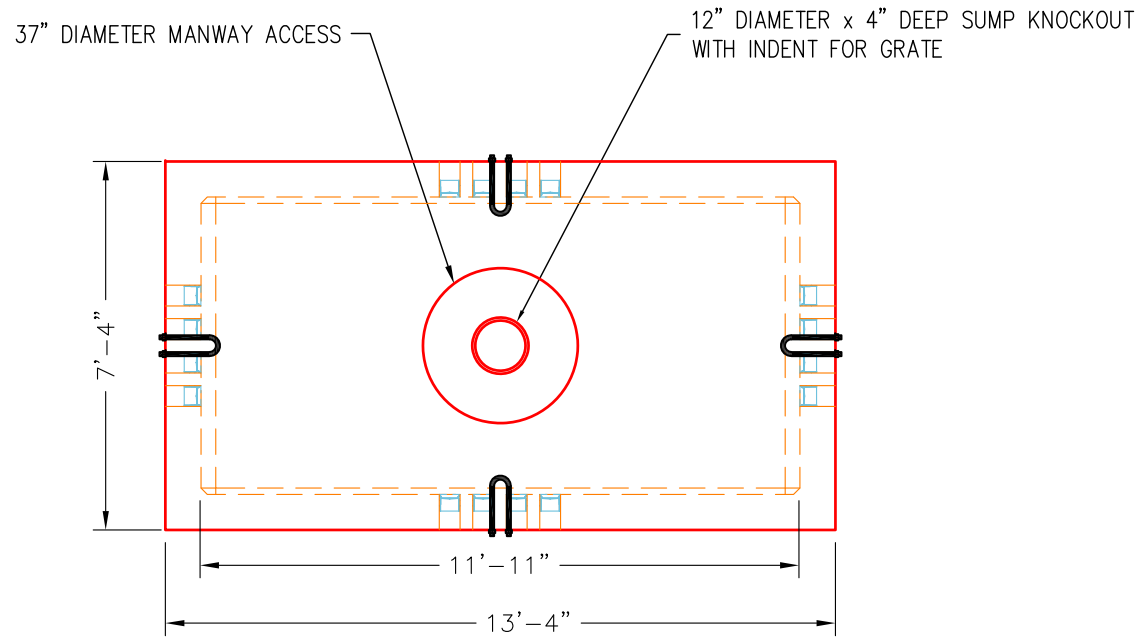


PLAN VIEW

(WITHOUT FRAME AND COVER)

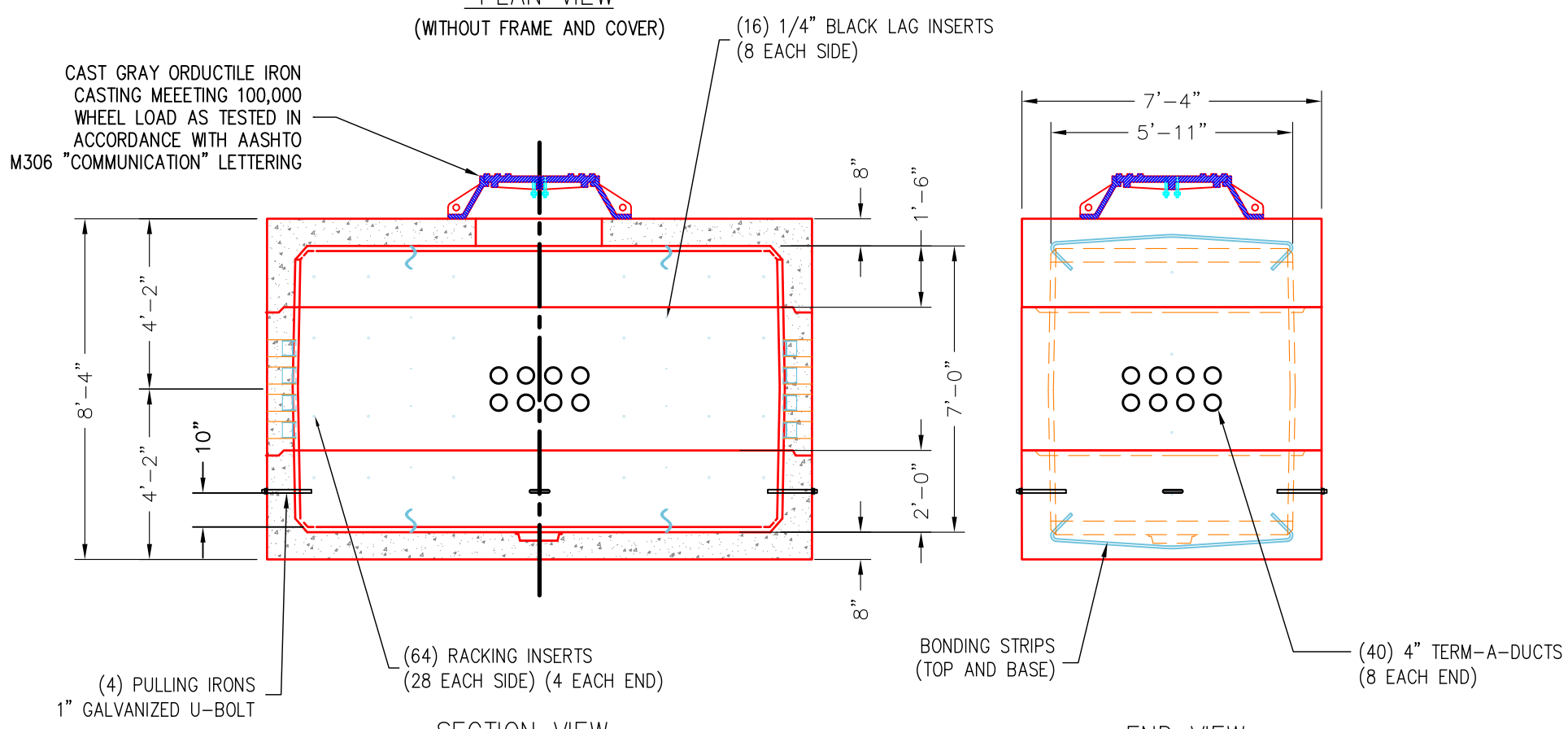


SECTION VIEW

END VIEW

NOTES:

1. PRECAST E80 RATED MAINTENANCE HOLES MUST BE MANUFACTURED ASTM C858/C858M STANDARD SPECIFICATION FOR UNDERGROUND PRECAST CONCRETE UTILITY STRUCTURES. IN ADDITION, PRECAST STRUCTURES MUST BE DESIGNED IN ACCORDANCE TO AREMA STANDARDS
2. ALL CONCRETE MUST HAVE A MINIMUM 28-DAY COMPRESSIVE STRENGTH OF 6000 PSI 42 MPA.
3. MINIMUM DESIGN LIVE LOAD MUST BE E80.
4. WALL AND SLAB (ROOF & FLOOR) THICKNESSES SHOWN ARE MINIMUMS. ACTUAL WALL AND SLAB THICKNESS MUST BE SHOWN ON SHOP DRAWINGS TO BE REVIEWED AND APPROVED.
5. ACTUAL PLACEMENT OF ACCESS OPENING AND CASTING TO BE UTILIZED MUST BE SHOWN ON THE SHOP DRAWINGS TO BE REVIEWED AND APPROVED
6. DETAIL SHOWS MULTIPLE SEAM (JOINT) PRECAST STRUCTURE. SINGLE TOP SEAM STRUCTURES ARE PERMITTED BY US GOVERNMENT APPROVAL, AND MUST BE SHOWN ON SHOP DRAWINGS TO BE REVIEWED AND APPROVED. JOINTS SHALL BE SEALED WITH ROPE SEALANT MEETING ASTM C990/C990M. ADDITIONALLY WHEN REQUIRED BY AHJ EXTERNAL JOINT SHALL BE WRAPPED WITH MATERIAL MEETING ASTM C877/C877M.
7. FRAMES AND COVERS MUST BE CONSTRUCTED USING GRAY IRON CONFORMING TO ASTM A38/A38M OR DUCTILE IRON CONFORMING TO ASTM A536/536M. LOAD RATING MUST BE AS INDICATED ON DRAWING.
8. ALL ANCHORING COMPONENTS MUST SATISFY THE TESTING CONDITIONS OF ASTM E488/E488M.
9. ALL MAINTENANCE HOLES WILL HAVE AN INTEGRATED GROUNDING SYSTEM.
10. REINFORCING STEEL MUST MEET ASTM A706/A706M OR A1064/A1064M.