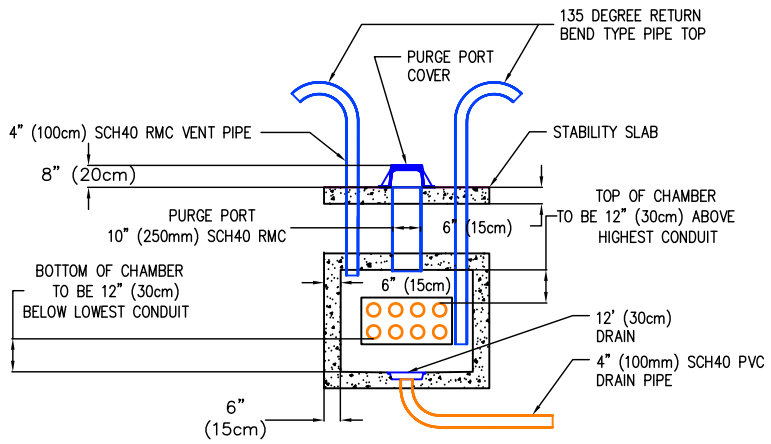


GAS VENTING CHAMBER WITH DRAIN
(LARGE)

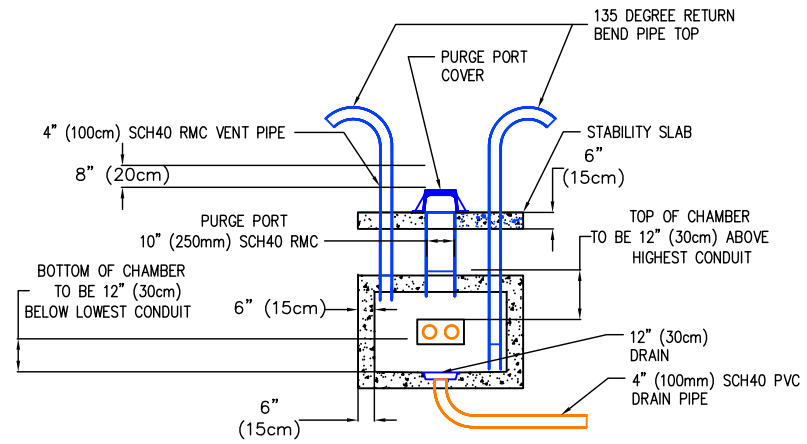


GAS VENTING CHAMBER WITH DRAIN
(SMALL FOR END USER BUILDING)

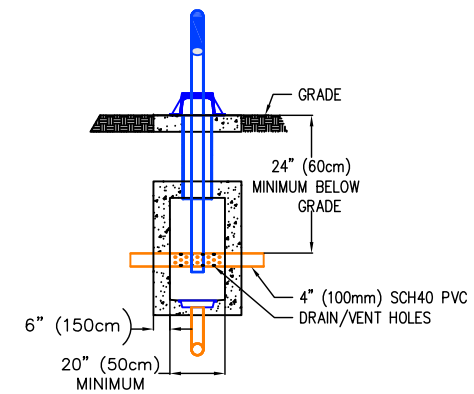


GAS VENTING CHAMBER WITH DRAIN
(SIDEVIEW)

NOTES:

1. THE GAS VENTING CHAMBER WITH DRAIN TO LOCATED NEAR THE BUILDING ENTRANCE.

2. ROUTE DRAIN DISCHARGE BELOW BUILDING ENTRANCE GRADE