NOTES:

1. PRECAST MAINTENANCE HOLES MUST MEET ASTM C858 STANDARD SPECIFICATION FOR UNDERGROUND PRECAST CONCRETE UTILITY STRUCTURES
2. ALL CONCRETE MUST HAVE A MINIMUM 28-DAY COMPRESSIVE STRENGTH OF 4000 PSI (28 MPA).
3. MINIMUM DESIGN LIVE LOAD MUST BE HS-20.
4. WALL AND SLAB (ROOF & FLOOR) THICKNESSES SHOWN ARE MINIMUM. ACTUAL WALL AND SLAB THICKNESS MUST BE SHOWN ON SHOP DRAWINGS TO BE REVIEWED AND APPROVED.
5. ACTUAL PLACEMENT OF ACCESS OPENING AND CASTING TO BE UTILIZED MUST BE SHOWN ON THE SHOP DRAWINGS TO BE REVIEWED AND APPROVED.
6. DETAIL SHOWS CENTER SEAM (JOINT) PRECAST STRUCTURE. TOP SEAM STRUCTURES ARE PERMITTED BY US GOVERNMENT APPROVAL, AND MUST BE SHOWN ON SHOP DRAWINGS TO BE REVIEWED AND APPROVED. JOINTS SHALL BE SEALED WITH ROPE SEALANT MEETING ASTM C990/C990M. ADDITIONALLY, WHEN REQUIRED BY AHJ EXTERNAL JOINT SHALL BE WRAPPED WITH MATERIAL MEETING ASTM C877/C877M.
7. FRAMES AND COVERS MUST BE CONSTRUCTED USING GRAY IRON CONFORMING TO ASTM A48/A48M OR DUCTILE IRON CONFORMING TO ASTM A536/A536M. LOAD RATING MUST BE AS NOTED ON DRAWING.
8. ALL ANCHORING COMPONENTS AND MUST SATISFY THE TESTING CONDITIONS OF ASTM E488/E488M.
9. ALL MAINTENANCE HOLES WILL HAVE AN INTEGRATED GROUNDING SYSTEM.
10. REINFORCING STEEL MUST MEET ASTM A706/A706M OR A1064/A1064M.

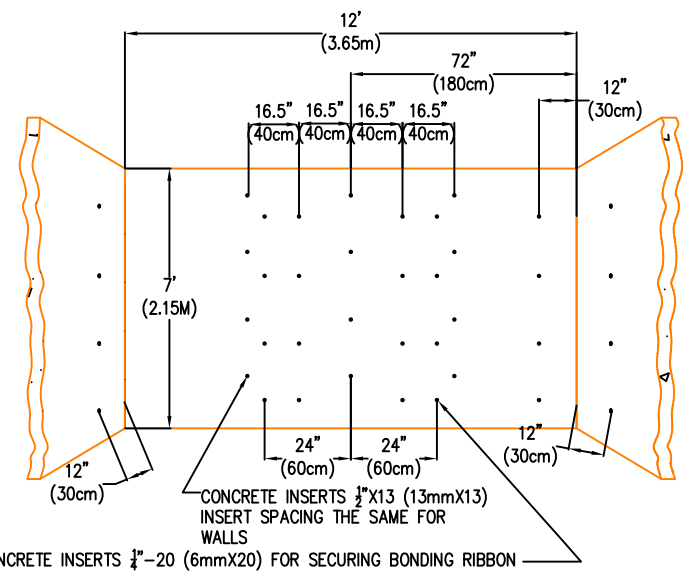


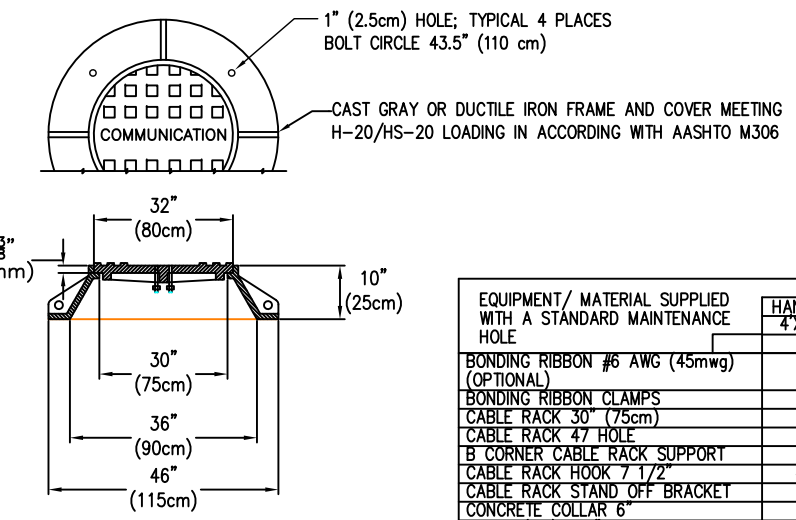


| EQUIPMENT/ MATERIAL SUPPLIED WITH A STANDARD MAINTENANCE HOLE | INLINE | | | MULTIDIRECTIONAL | | |
|---|---|---|---|---|---|---|
| | HANDHOLE | MANHOLE | | HANDHOLE | MANHOLE | |
| | 4'X4'X4' | 12'X6'X7'H | 12'X6'X10'H | 4'X4'X4' | 12'X6'X7'H | 12'X6'X10'H |
| BONDING RIBBON #6 AWG (45mwg) (OPTIONAL) | 20 | 65 | 65 | 20 | 65 | 65 |
| BONDING RIBBON CLAMPS | 12 | 20 | 20 | 12 | 20 | 20 |
| CABLE RACK 30" (75cm) | 4 | | | 4 | | |
| CABLE RACK 47 HOLE | | 14 | 14 | | 14 | 14 |
| B CORNER CABLE RACK SUPPORT | | 8 | 8 | | 4 | 4 |
| CABLE RACK HOOK 7 1/2" | 8 | 14 MINIMUM | 14 MINIMUM | 8 | 14 MINIMUM | 14 MINIMUM |
| CABLE RACK STAND OFF BRACKET | 8 | 12 | 12 | 8 | 12 | 12 |
| CONCRETE COLLAR 6" | 1 | 1 | | 1 | 1 | 1 |
| COVER (LID) 30" DIAMETER | 1 | 1 | 1 | 1 | 1 | 1 |
| TRAFFIC RATED FRAME AND COVER | 1 | 1 | 1 | 1 | 1 | 1 |
| 0.75"X10' (20mmX3m) COPPER CLAD STEEL GROUND ROD (OPTIONAL) | 1 | 1 | 1 | 1 | 1 | 1 |
| GROUND ROD CLAMP 3/4" (20mm) | 1 | 1 | 1 | 1 | 1 | 1 |
| METAL HIT ANCHOR | 10 | 20 | 20 | 10 | 20 | 20 |
| PULL-IN IRONS | 4 | 4 | 4 | 4 | 4 | 4 |
| SUMP | 1 | 1 | 1 | 1 | 1 | 1 |
| FLEXIBLE GROUND STRAP 3' (1M) | 1 | 2 | 2 | 1 | 2 | 2 |

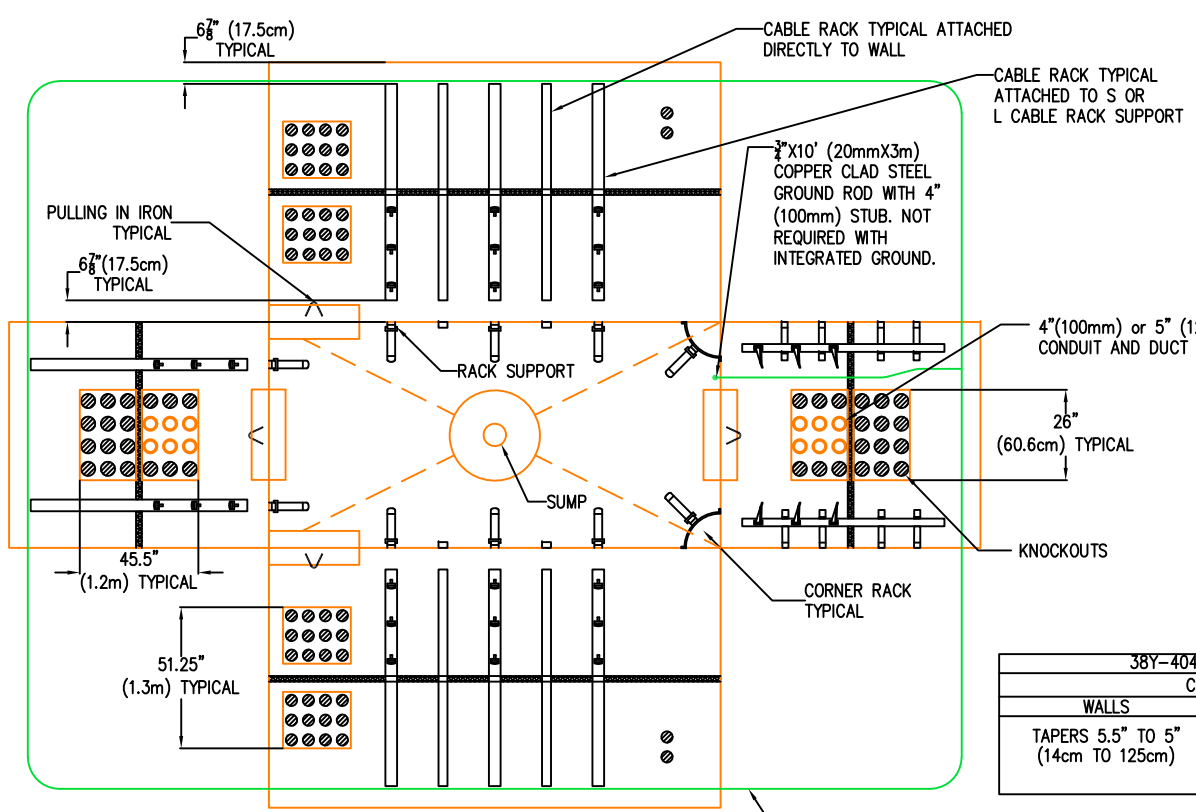


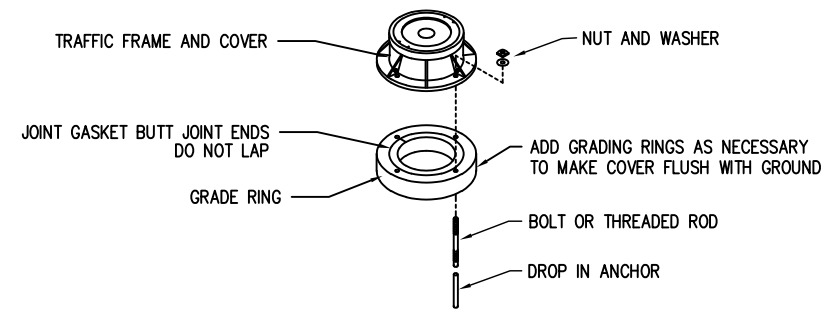


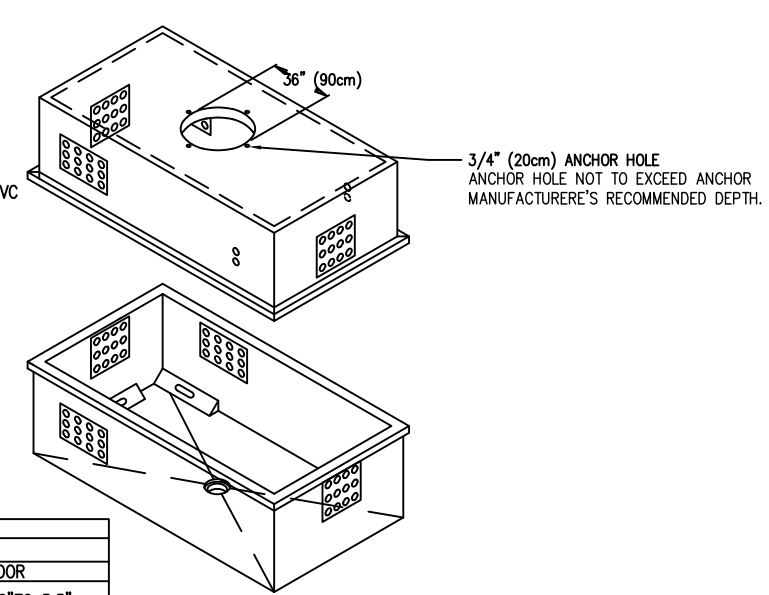


CABLE ENTRANCES WITH DUCT TERMINATOR OPTION

| 38Y-4046-3 PRECAST MANHOLE | | |
|---|---|---|
| CONCRETE THICKNESS | | |
| WALLS | ROOF | FLOOR |
| TAPERS 5.5" TO 5" (14cm TO 125cm) | 6" (150cm) | TAPERS 6"TO 5.5" (15.3cm TO 14cm) |

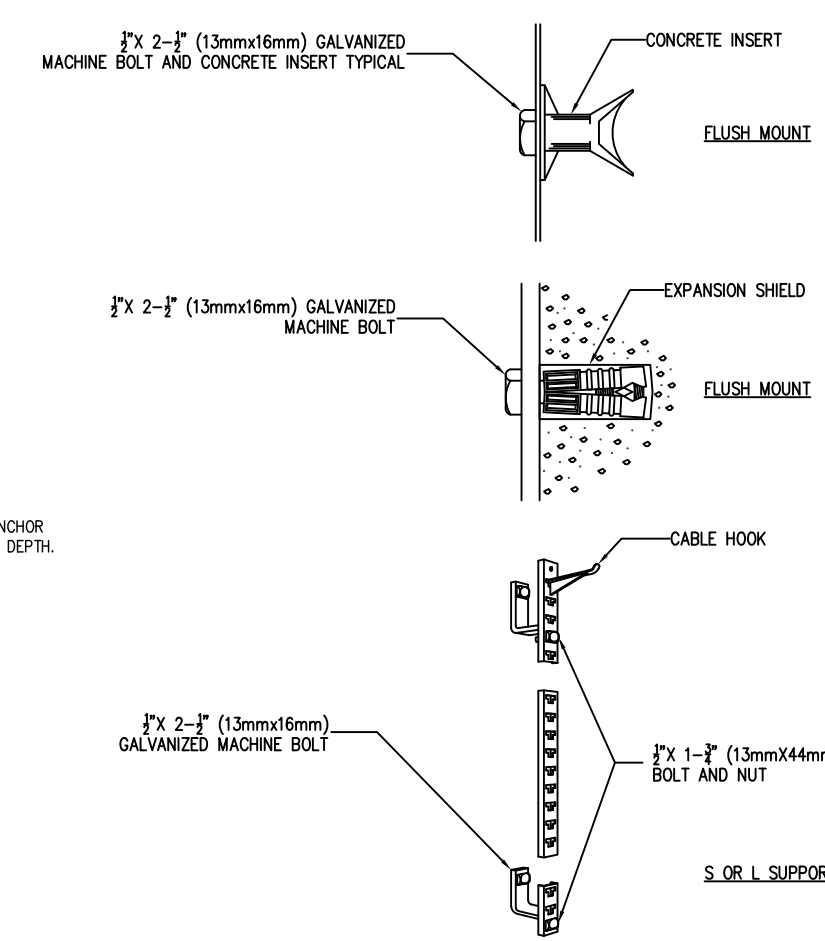


CAD MAINTAINED, CHANGES MUST BE INCORPORATED BY USAISEC. AUTOCAD RELEASE 2018.DWG)