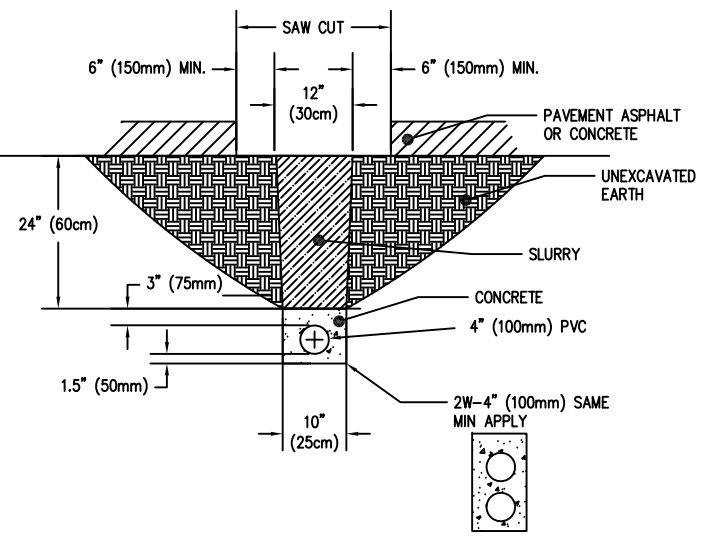


DETAIL A

CONCRETE ENCASED UNDER ROAD SURFACE

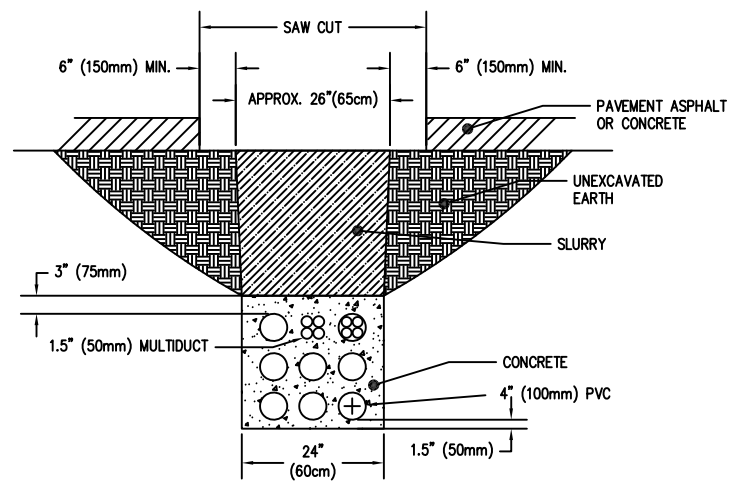


DETAIL B

CONCRETE ENCASED UNDER ROAD SURFACE

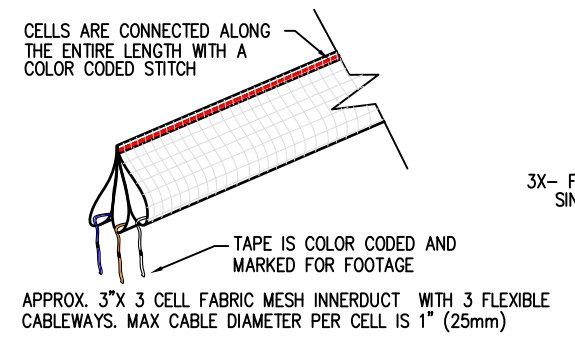


APPROX. 3"X 3 CELL FABRIC MESH INNERDUCT WITH 3 FLEXIBLE CABLEWAYS. MAX CABLE DIAMETER PER CELL IS 1" (25mm)

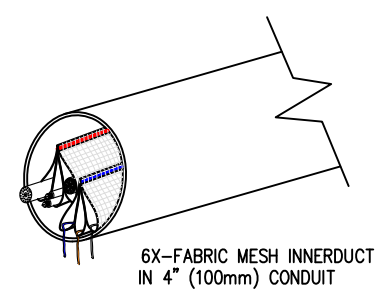

6X-FABRIC MESH INNERDUCT
IN 4" (100mm) CONDUIT

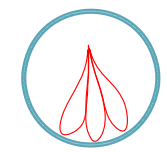

3X- FABRIC MESH INNERDUCT 3 RACEWAYS
SINGLE PACK IN 4" (100mm) CONDUIT

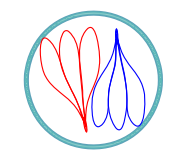

6X- FABRIC MESH INNERDUCT 6 RACEWAYS
DOUBLE PACK IN 4" (100mm) CONDUIT

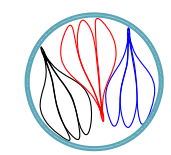

9X- FABRIC MESH INNERDUCT 9 RACEWAYS
TRIPLE PACK IN 4" (100mm) CONDUIT

NOTES:

1. CONTRACTOR SHALL FURNISH AND INSTALL CONDUITS.

2. THE TRENCH FOR MULTIPLE CONDUIT DUCT SHOULD BE NO GREATER THAN NEEDED TO PROVIDE ADEQUATE WORKING SPACE. FOR SINGLE DUCT (UNENCASED OR ENCASED).

3. SUBJECT TO FEDERAL, STATE AND LOCAL REQUIREMENTS. THE DEPTH OF THE TRENCH SHOULD BE NEW CONDUIT FORMATIONS MUST BE INSTALLED AT A CONSTANT DEPTH OR AT LEAST AT A DEPTH WHERE A FORMATION OF EQUAL SIZE CAN BE PLACED ABOVE THE EXISTING AND STILL ALLOW FOR 24 INCHES (60 cm) OF COVER OR BE BELOW THE FROST LINE WHICHEVER IS GREATER. A MINIMUM OF 18 INCHES (45CM) IS SUFFICIENT WHEN CONDUIT IS PLACED UNDER DRIVEWAYS, SIDEWALKS AND OFF THE TRAVELED PART OF THE RIGHT-OF-WAY.

4. THE CONTRACTOR SHALL ESTABLISH FINAL GRADES WITH THE FACILITY ENGINEERS BEFORE EXCAVATING FOR ANY PROPOSED CONDUIT RUNS.

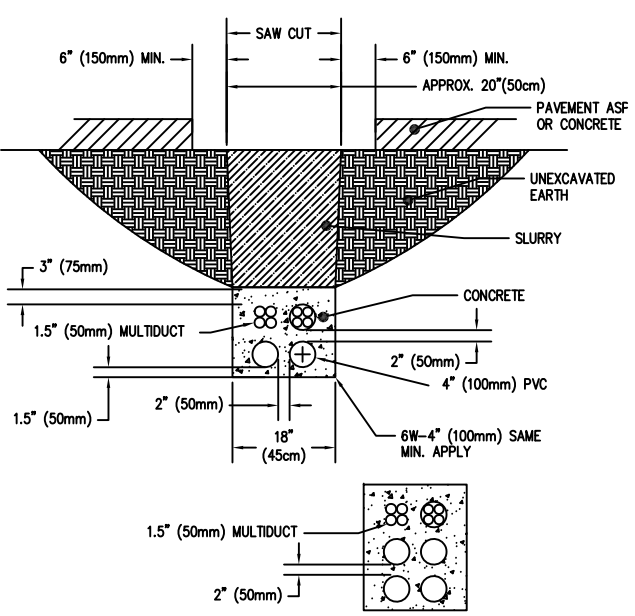


DETAIL C

CONCRETE ENCASED UNDER ROAD SURFACE