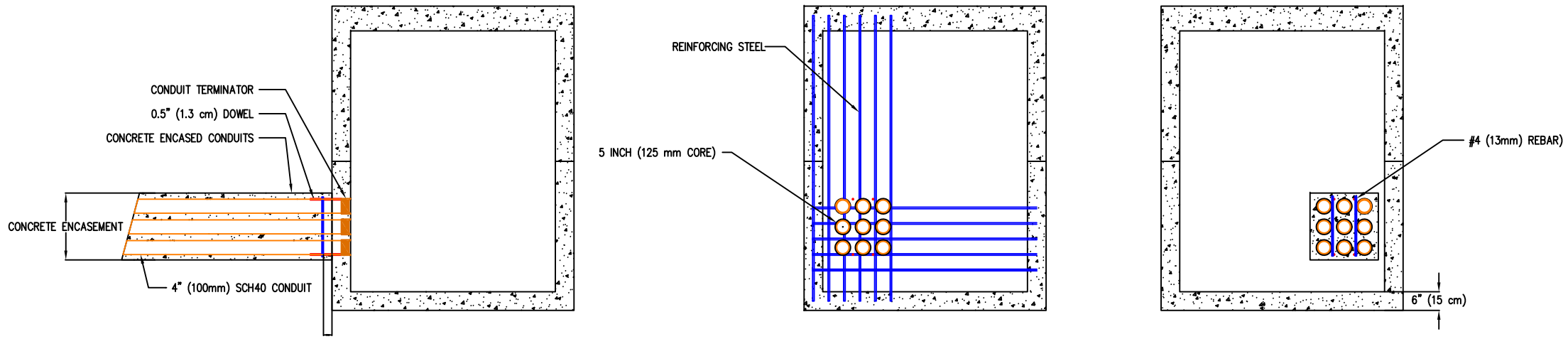


SIDE VIEW

INSIDE WALL VIEW

OUTSIDE WALL VIEW

# REPAIR TO SUPPORTING STRUCTURES WITH REBAR

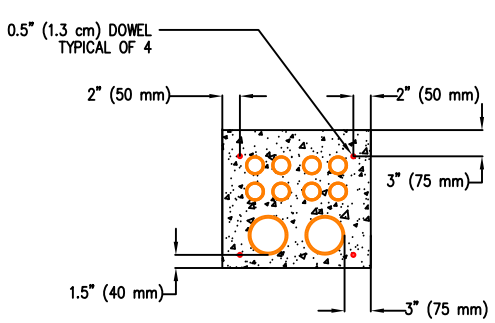


DOWEL LOCATION
FOR 2-WAY
WITH (2) 2" (50 cm)
4-WAY MULTI-DUCTS

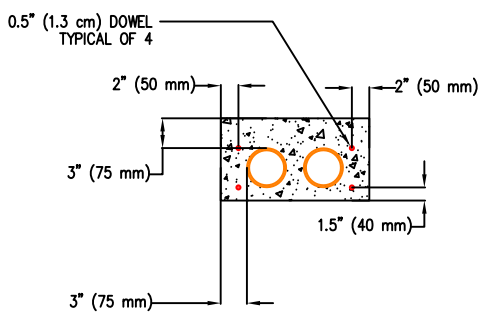


DOWEL LOCATION FOR
2-WAY SYSTEM

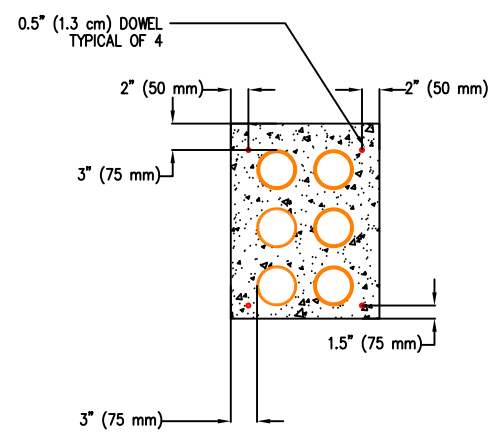


DOWEL LOCATION FOR
6-WAY SYSTEM

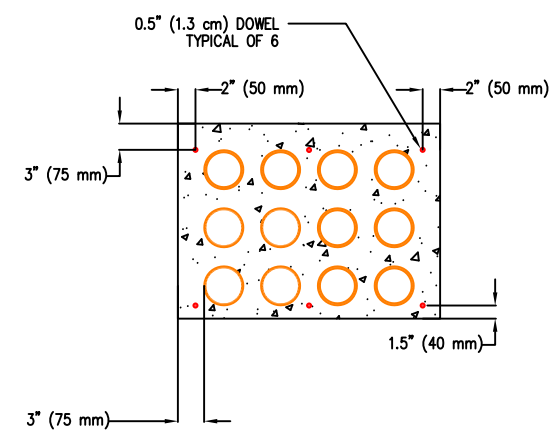


DOWEL LOCATION FOR
12-WAY SYSTEM

# DOWEL LOCATIONS FOR VARIOUS CONDUIT FORMATIONS

NOTES:

1. ALL NEW CONCRETE ENCASED CONDUIT SYSTEMS SHALL BE CONNECTED TO THE SUPPORTING STRUCTURE USING DEFORMED GALVANIZED 0.5" (13 MM) GRADE 60 DOWELS, AND CONFORM TO SPECIFICATION ASTM A615/A615M.
2. DOWELS SHALL SECURED TO THE SUPPORTING STRUCURE, MAINTENANCE HOLE, HAND HOLE, OR CABLE VAULT, USING AN ASTM C881 [881M] CLASS V EPOXY.
3. IF REINFORCING BARS (REBAR) ARE CUT DURING CORE DRILLING, THEN LOCATE #4 (13 MM) REBARS VERTICALLY, MEASURED APPROXIMATELY 3" (7.5 MM) OFF THE OUTSIDE WALL OF THE SUPPORTING STRUCTURE.
4. REBAR WILL BE PLACED ON EITHER SIDE OF CENTRAL CONDUITS.
5. TIE THE REBAR TO THE DOWELS WITH GALVANIZED WIRE.
6. FOR NON-ENCASED CONDUITS, A MINIMUM OF 12" (30 CM) OF THE CONDUIT SYSTEM, MEASURED AWAY FROM THE SUPPORTING STRUCTURE, WILL BE ENCASED IN CONCRETE.